RHINO-RACK® 2500 SPORTZ SUPPLEMENT SHEET

VEHICLE	KIT	CROSSBAR
Nissan Frontier D40 King Cab	DK374	SZ137
RUNNING DATES	05-	
VEHICLE NOTES		

VISIT THE ONLINE CALCULATOR FOR CURRENT SYSTEM LOAD LIMIT DATA

DYNAMIC ROAD LOAD LIMIT (NOTE: DIFFERENT ON AND OFF ROAD CARGO LIMIT)
***USE THE VEHICLE MANUFACTURER'S MAXIMUM ROOF ALLOWANCE IF IT IS LOWER THAN THE FIGURE LISTED**

LOAD LIMIT		SYSTEM WEIGHT		ON ROAD CARGO LIMIT	OR	OFF ROAD CARGO LIMIT (ON ROAD CARGO LIMIT / 2)
UP TO 75 kg * 165 lb	−	5 kg 11lb	=	UP TO 70 kg 154 lb		UP TO 35 kg 77 lb

PAD AND CLAMP DETAILS

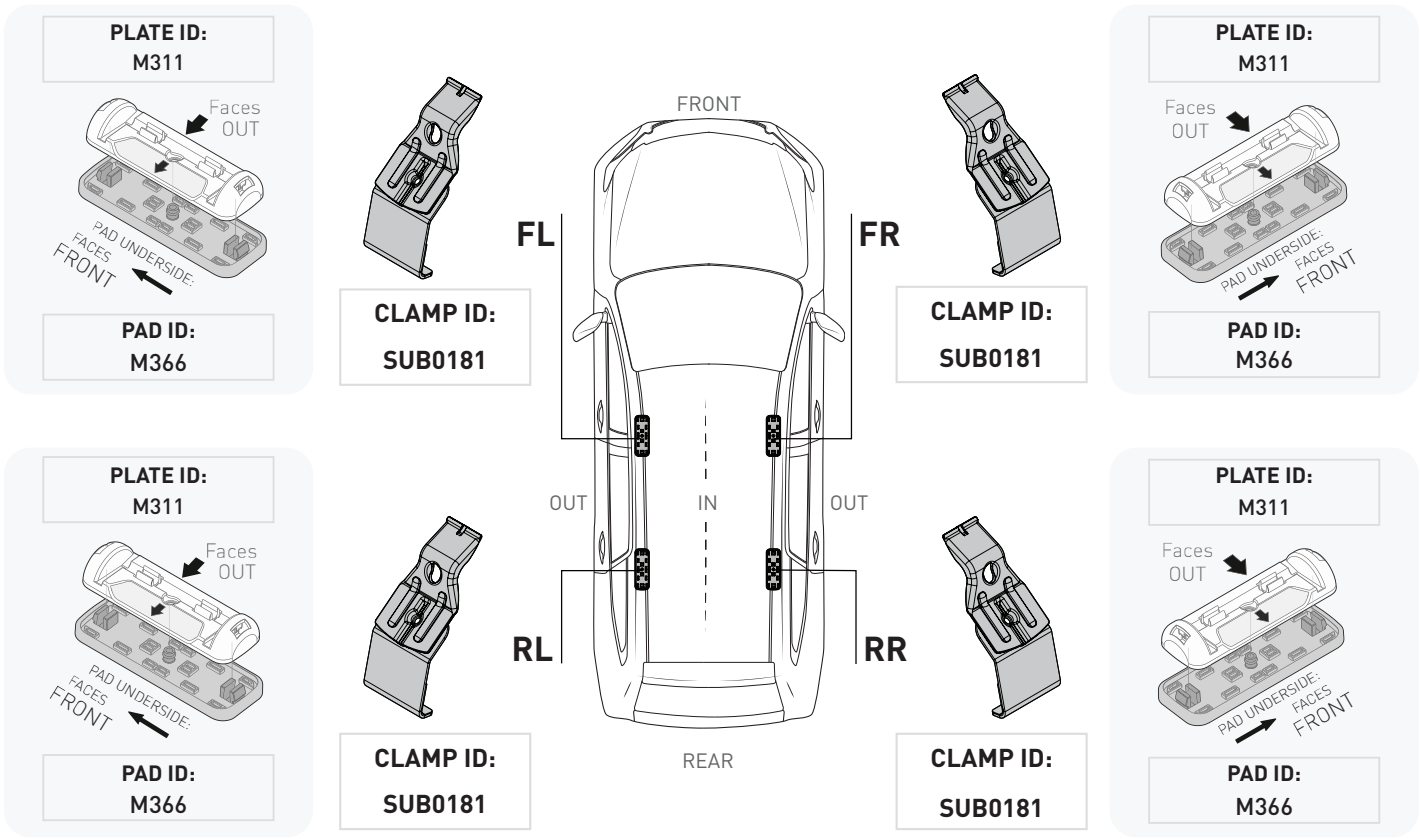

MEASUREMENT STRIPS

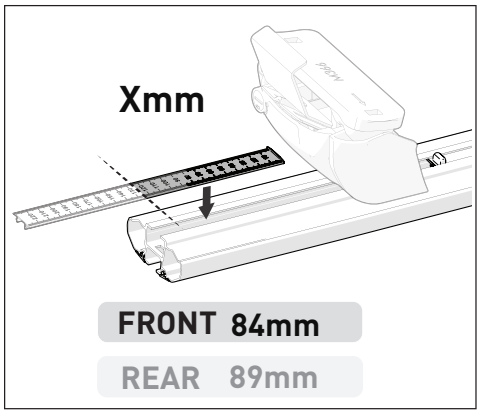

VEHICLE POSITIONING

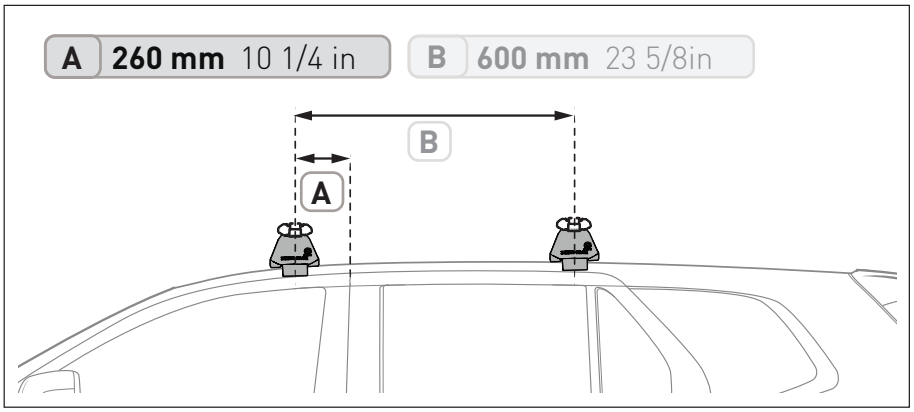

NOTES FOR DEALERS / FITTERS

It is your responsibility to ensure these fitting instructions are given to the end user or client.

Document No: R4541
Issue No: 1
Issue Date: 6-Jan-25