RHINO-RACK® 2500 SPORTZ SUPPLEMENT SHEET

VEHICLE	KIT	CROSSBAR
Ford Taurus 4dr sedan	DK229	SZ126
RUNNING DATES	2010 on	
VEHICLE NOTES		

VISIT THE ONLINE CALCULATOR FOR CURRENT SYSTEM LOAD LIMIT DATA

DYNAMIC ROAD LOAD LIMIT (NOTE: DIFFERENT ON AND OFF ROAD CARGO LIMIT)
***USE THE VEHICLE MANUFACTURER'S MAXIMUM ROOF ALLOWANCE IF IT IS LOWER THAN THE FIGURE LISTED**

LOAD LIMIT		SYSTEM WEIGHT		ON ROAD CARGO LIMIT	OR	OFF ROAD CARGO LIMIT (ON ROAD CARGO LIMIT / 2)
UP TO 75 kg * 165 lb	−	5 kg 11lb	=	UP TO 70 kg 154 lb		UP TO 35 kg 77 lb

PAD AND CLAMP DETAILS

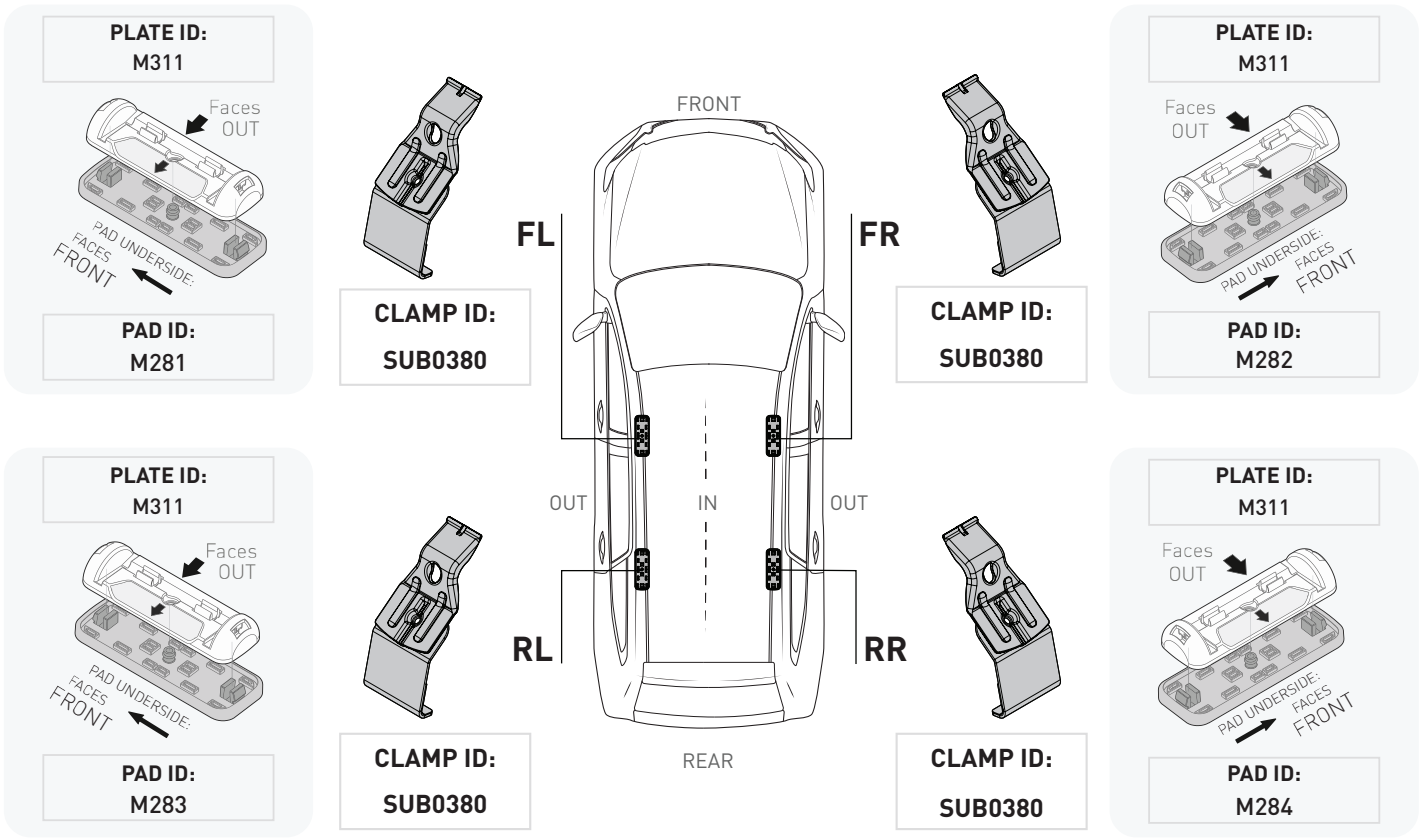

MEASUREMENT STRIPS

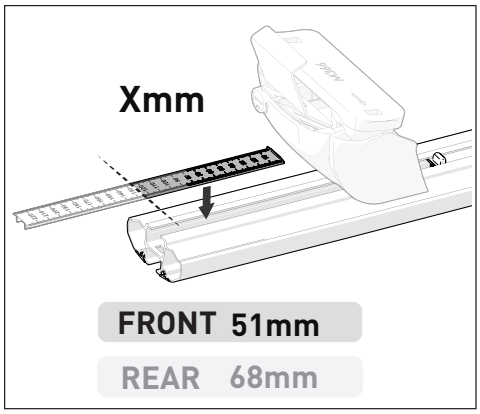

VEHICLE POSITIONING

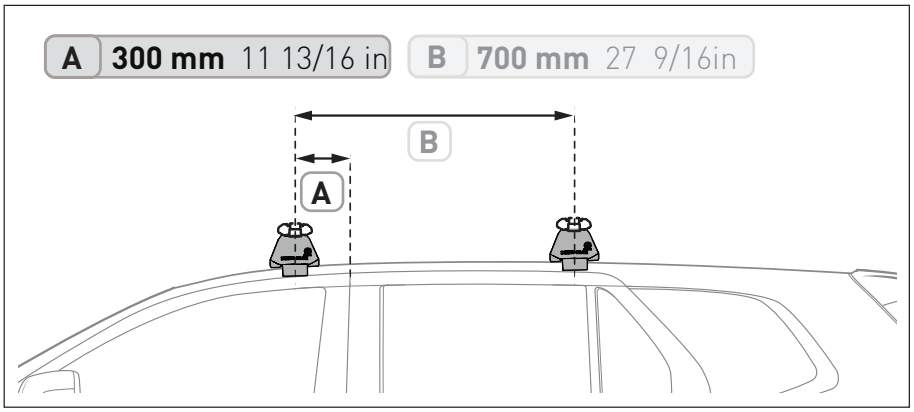

NOTES FOR DEALERS / FITTERS

It is your responsibility to ensure these fitting instructions are given to the end user or client.

Document No: R4397
Issue No: 1
Issue Date: 18-Dec-24