RHINO-RACK® 2500 SPORTZ SUPPLEMENT SHEET

VEHICLE	KIT	CROSSBAR
Scion XB 5dr hatch	DK152	SZ137
RUNNING DATES	2008 - 2015	
VEHICLE NOTES		

VISIT THE ONLINE CALCULATOR FOR CURRENT SYSTEM LOAD LIMIT DATA

DYNAMIC ROAD LOAD LIMIT (NOTE: DIFFERENT ON AND OFF ROAD CARGO LIMIT)
***USE THE VEHICLE MANUFACTURER'S MAXIMUM ROOF ALLOWANCE IF IT IS LOWER THAN THE FIGURE LISTED**

LOAD LIMIT		SYSTEM WEIGHT		ON ROAD CARGO LIMIT	OR	OFF ROAD CARGO LIMIT (ON ROAD CARGO LIMIT / 2)
UP TO 60 kg * 132 lb	−	5 kg 11lb	=	UP TO 55 kg 121 lb		UP TO 28 kg 61 lb

PAD AND CLAMP DETAILS

PLATE ID: M311

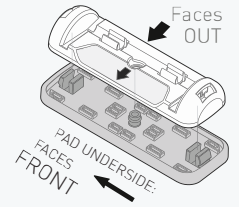

PAD ID: M366

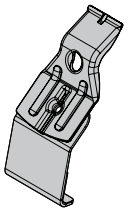

CLAMP ID: SUB0151

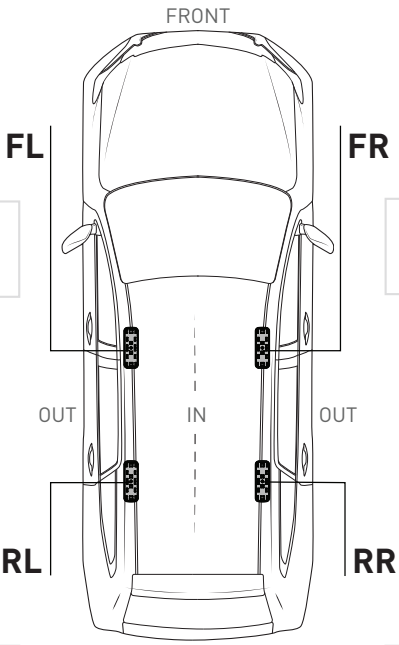

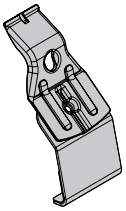

CLAMP ID: SUB0151

PLATE ID: M311

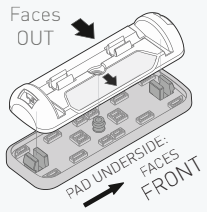

PAD ID: M366

PLATE ID: M311

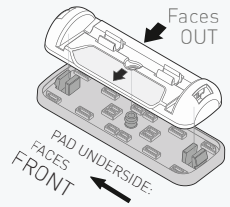

PAD ID: M366

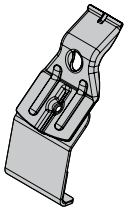

CLAMP ID: SUB0151

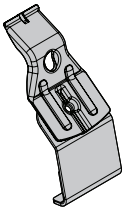

CLAMP ID: SUB0151

PLATE ID: M311

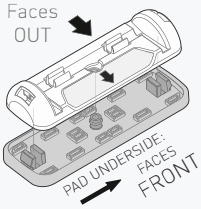

PAD ID: M366

MEASUREMENT STRIPS

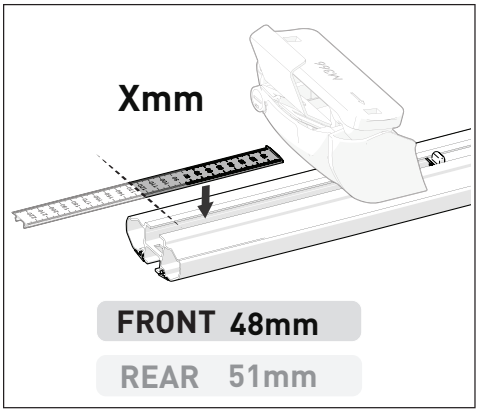

VEHICLE POSITIONING

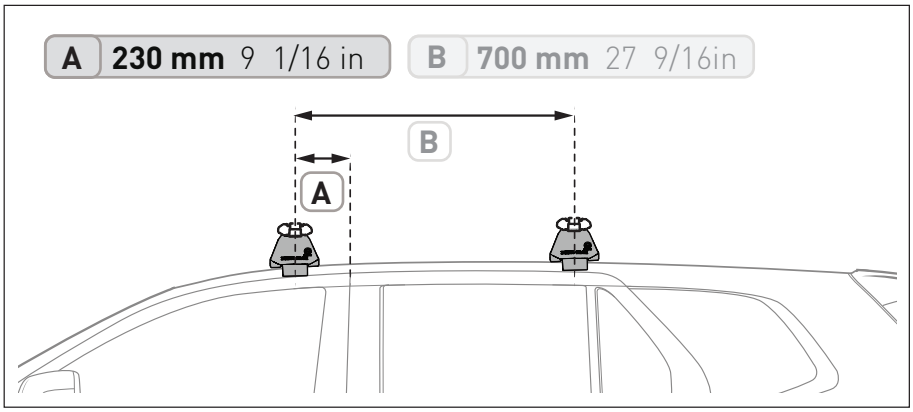

NOTES FOR DEALERS / FITTERS

It is your responsibility to ensure these fitting instructions are given to the end user or client.

Document No: R4333
Issue No: 1
Issue Date: 18-Dec-24