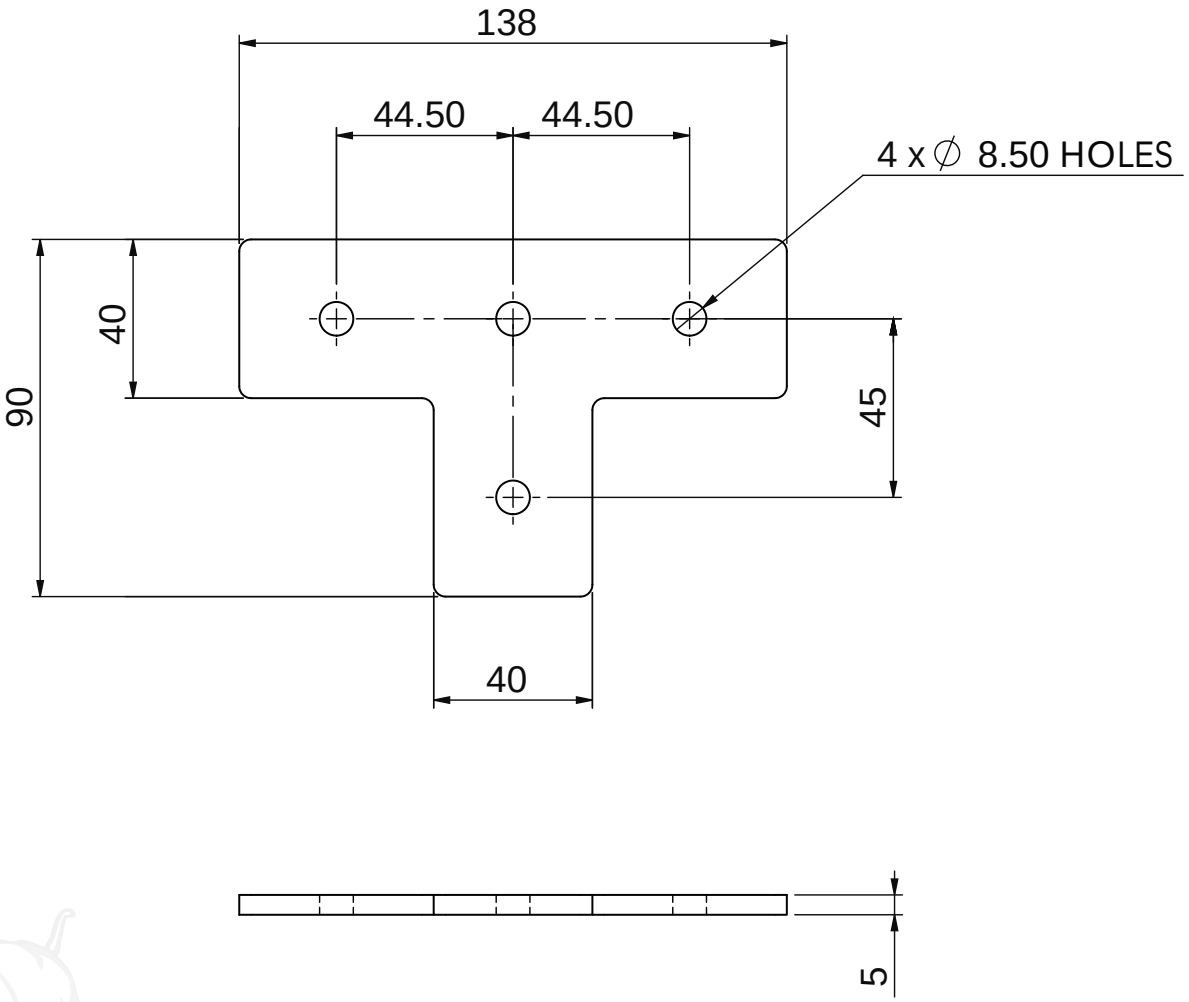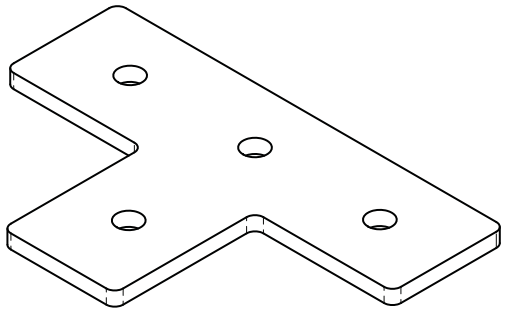C641 T Shape Steel Fitting Plate